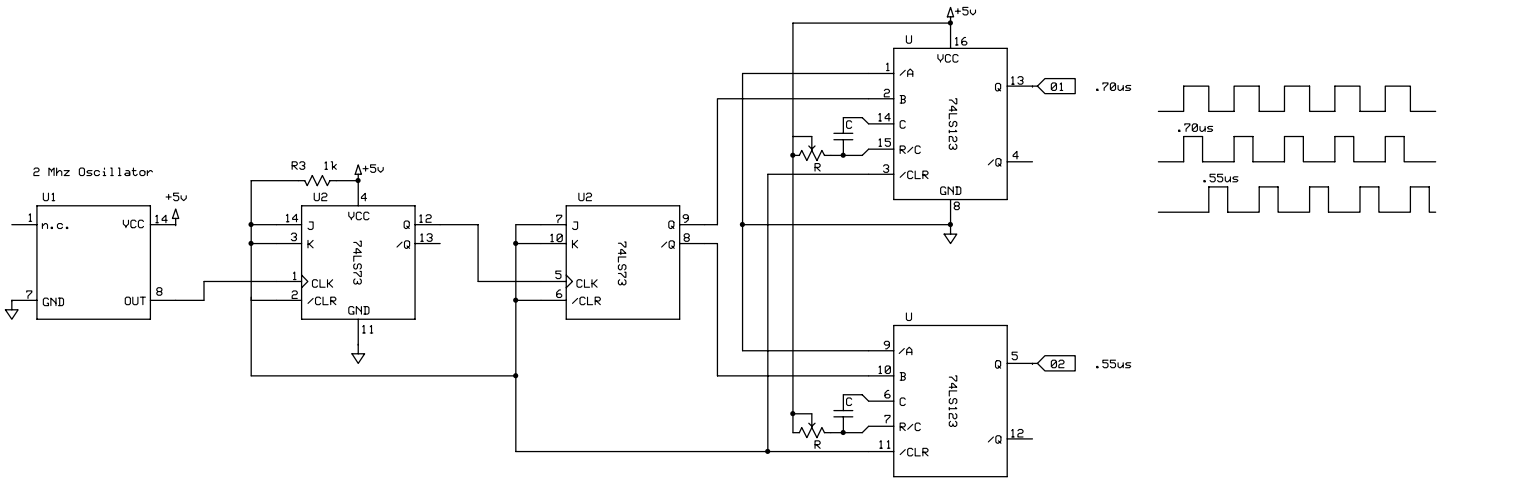

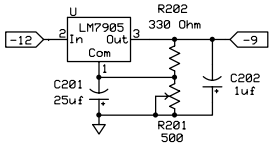

TMD Innovations LLC		
Schematic Name		
Len Bayles	Rev 1.0 9/3/2006	Page 7