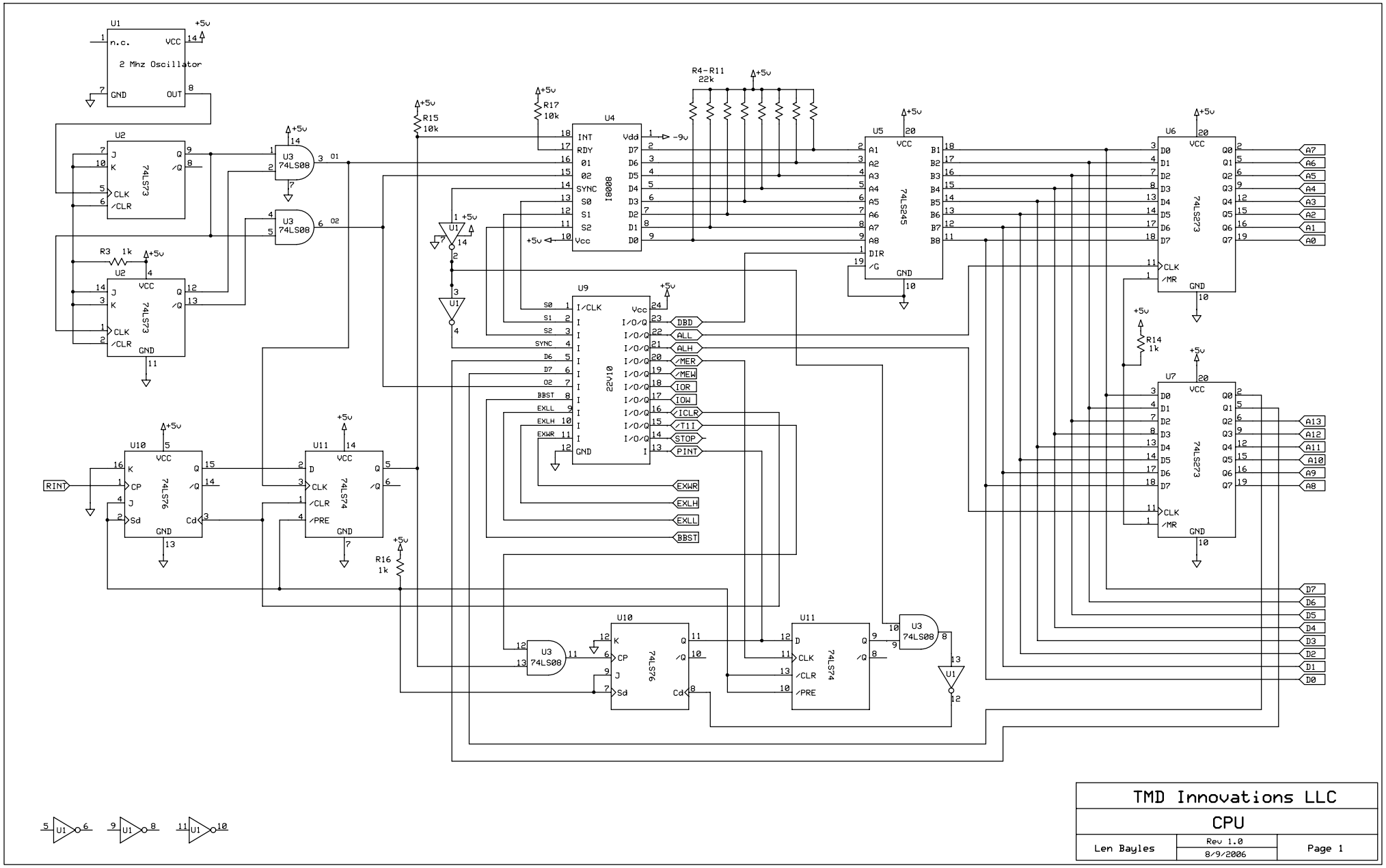

TMD Innovations LLC		
CPU		
Len Bayles	Rev 1.0 8/9/2006	Page 1